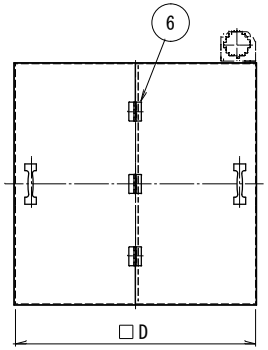

Model	Previous type	Tank dimensions			Lid dimensions	Stand dimensions			Dimensions of frame for component			Mass(Empty)
		A	B	C	D	F	G	H	F	G	H	
T-260L	TV-150	820	251.2	365	830	931.2	910	1000.2	981.2	960	1099.2	Approx.48kg
T-350L	TV-200	950	251.2	365	960	931.2	910	1000.2	981.2	960	1099.2	Approx.55kg
T-600L	TV-300	1200	201.2	565	1210	1031.2	1010	1100.2	1131.2	1100	1249.2	Approx.75kg

ITEM NO.	DESCRIPTION	REQ.D	MATERIAL	REFERENCE
1	Tank	1	SUS304-2B	
2	Lid	1	SUS304-2B	
3	Frame	1	SS400	L40x40x3
4	Caster	2/2		WITH LOCK WITHOUT LOCK
5	Square seat knob	2	Part of commerce	SUS304
6	Hinge	3	TAKIGEN	B-1078-4
7	MATSUI seal	1	Polyester film	95x60
8	Name plate	1	Polyester film	95x18

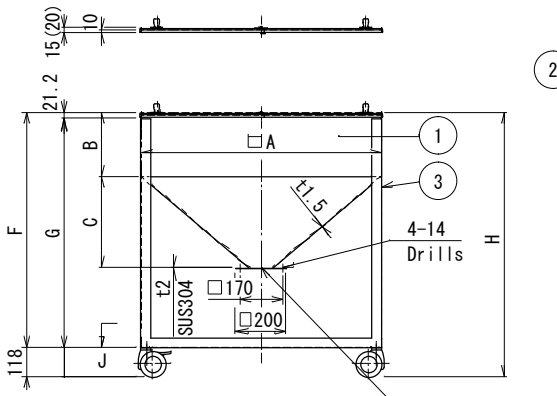

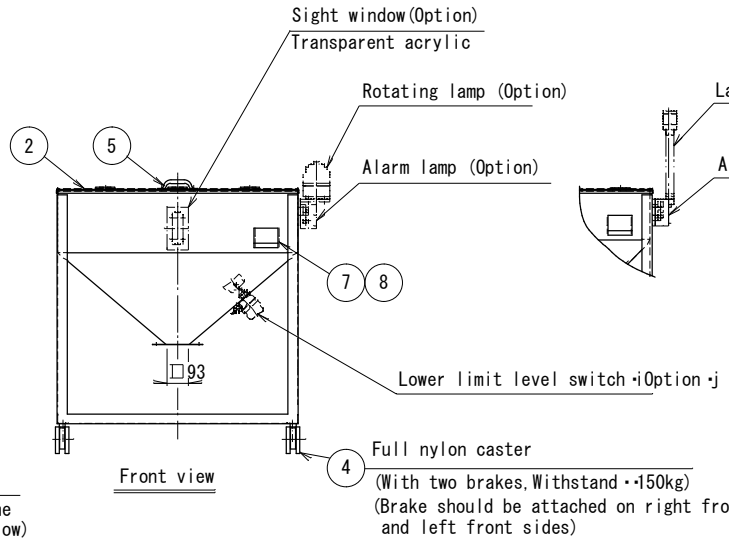

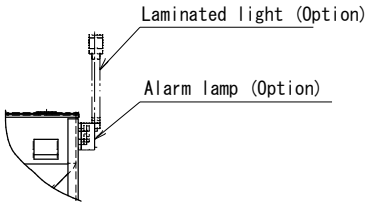

Suction box dimension table

Dia.L	J		K
	2 Ways	3 Ways	
38	100	80	100
48.6	100	90	120
60.5	120	100	130
76.3	120	120	150

Fig-"W"

(a) Various combinations of discharging portions
(for details, according to the attached drawing.)
(b) Mounting face with or without packing
(c) Set the nozzle(on the right, left, front face or rear face)facing to the front face.

Fig 'W'

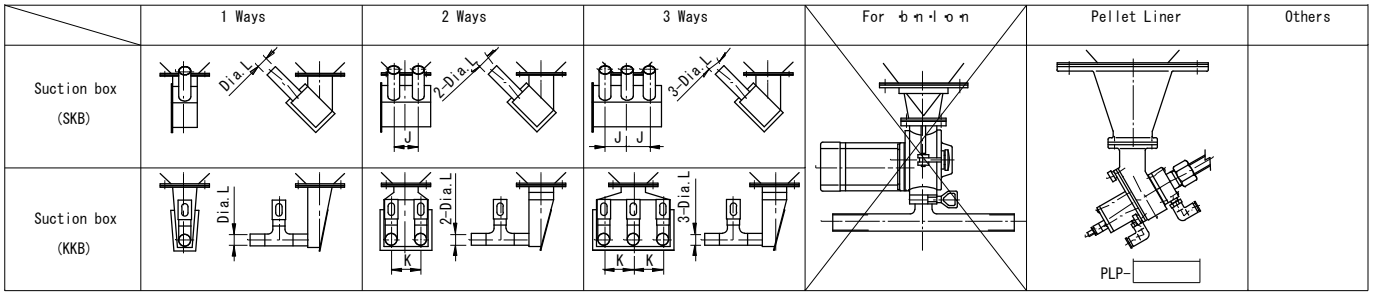

<Special description>

1.Option specification

Without * With(According to the attached specifications)

REVISION				
MARK	DATE	CONTENTS	CHKD	APPD

NAME	Standard product(Material tank various combinations drawing)	FORM	T-260L,350L,600L
APPROVED BY	MATSUMOTO	CODE NO.	·S
DSGND(CHKD)BY	SANDEEP	DATE	13/04/2020
DRAWN BY	HIMANSHU	UNIT mm	PLANE TRIGONOMETRY
SCALE	1/15	DWG.NO.	INA001131

MATSUI TECHNOLOGY INDIA LIMITED